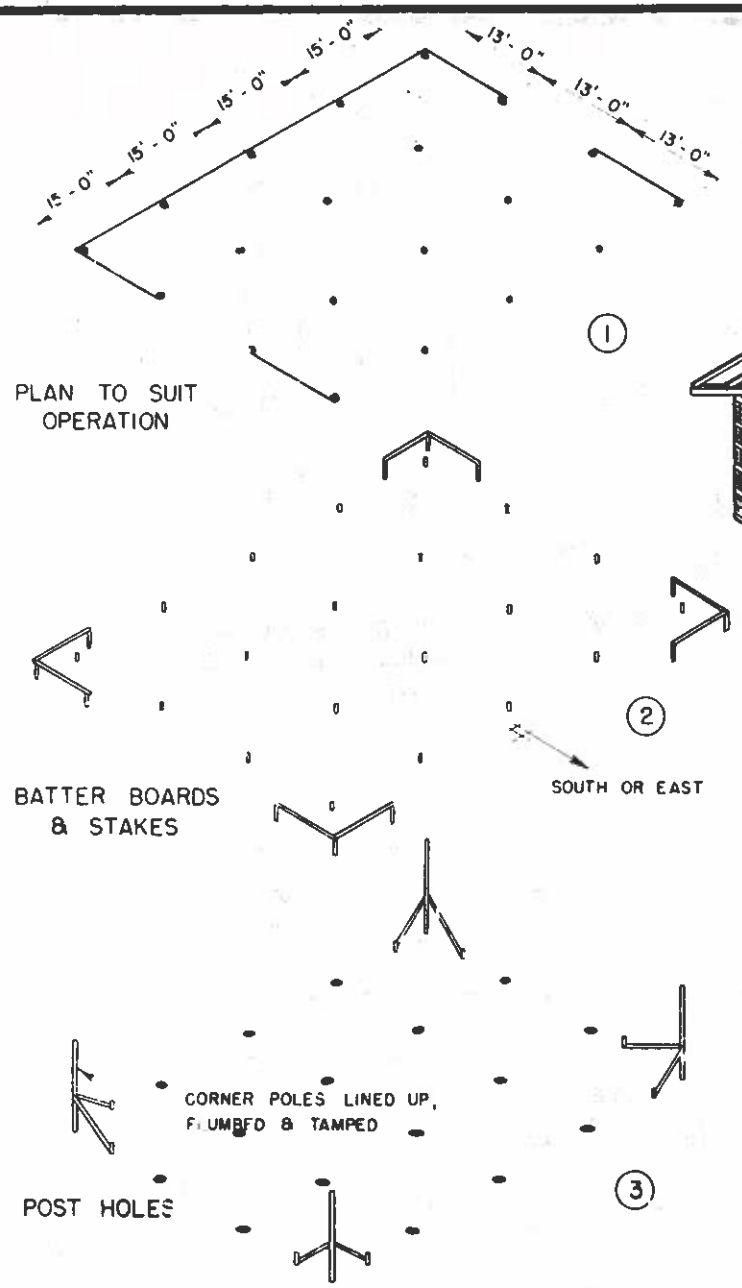

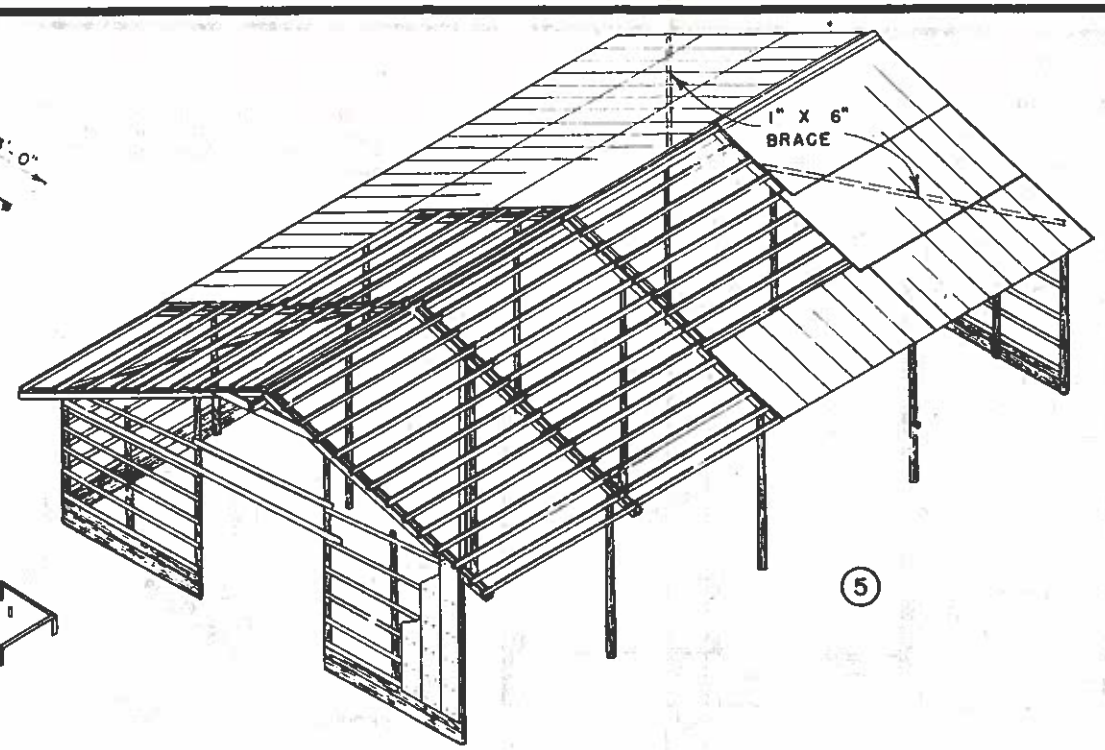

PURLINS, GIRTS, ROOFING & SIDING

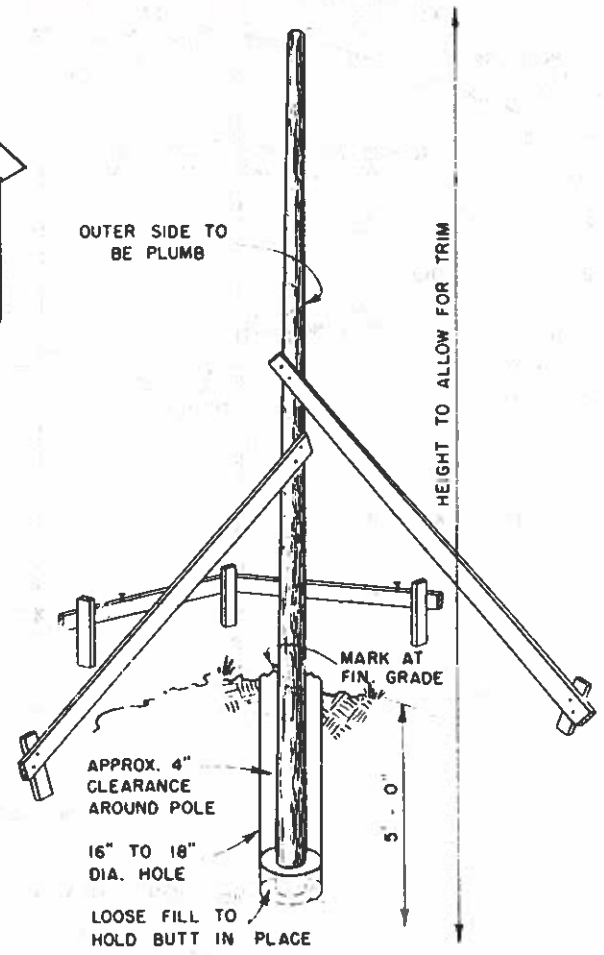

POST HOLE & BRACED POLE

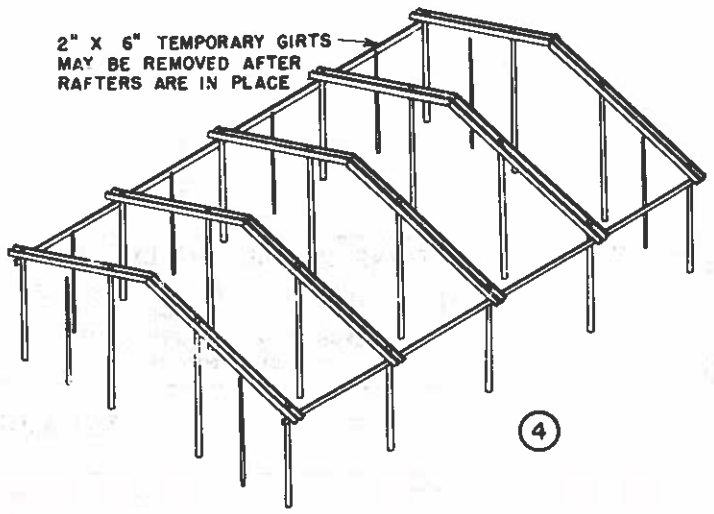

ERECTION OF BALANCE OF POLES & RAFTERS

POLE & RAFTERS

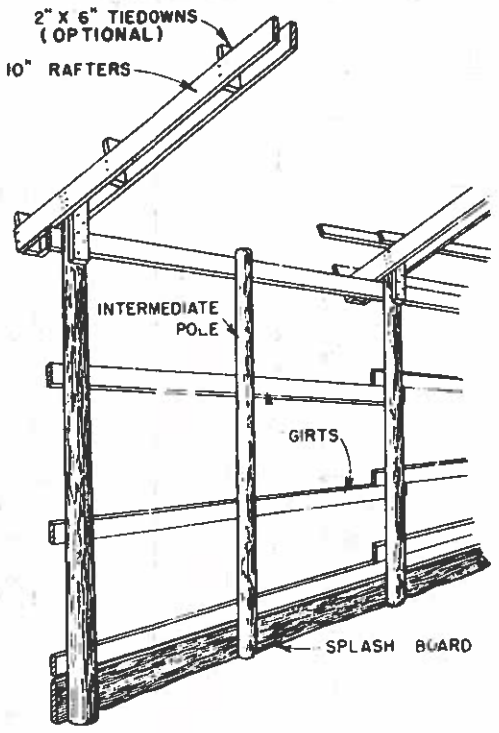

POLES, RAFTERS, PURLINS & GIRTS

NOTE

ALL POLES & SPLASH BOARDS TO BE PRESSURE-TREATED WITH PRESERVATIVE.

NOTE

THIS BUILDING IS DESIGNED FOR AREAS OF THE SOUTHERN UNITED STATES WHERE THE SNOW LOAD DOES NOT EXCEED 10# PER SQ. FT & WIND DOES NOT EXCEED 88 MI. PER HOUR
IN A FEW AREAS, SUCH AS NORTHERN VIRGINIA & WESTERN KENTUCKY WHERE SNOW LOADS EXCEED 10# PER SQ. FT., 2" X 12" RAFTERS SHOULD BE USED INSTEAD OF THE 2" X 10" RAFTERS SHOWN & PURLINS SHOULD BE SPACED 16" O.C. INCREASE NUMBER OF 30d NAILS IN RAFTER TO POLE CONNECTIONS 50%.
IT SHOULD NOT BE USED IN OTHER AREAS WITHOUT REDESIGNING FRAMING TO MEET LOCAL CONDITIONS.

NOTE

THIS BARN MAY BE BUILT IN ANY LENGTH DESIRED IN UNITS OF 15'-0"

TEXAS AGRICULTURAL EXTENSION SERVICE
THE TEXAS A&M UNIVERSITY SYSTEM
AND
U. S. DEPARTMENT OF AGRICULTURE COOPERATING
DANIEL C. PFANNSTIEL, DIRECTOR, COLLEGE STATION, TEXAS

POLE BARN – 39' WIDE

DRAWN BY:	SCALE: AS SHOWN
TRACED BY:	SHEET 1 OF 3
AUG '76	SERIAL NO. 5780

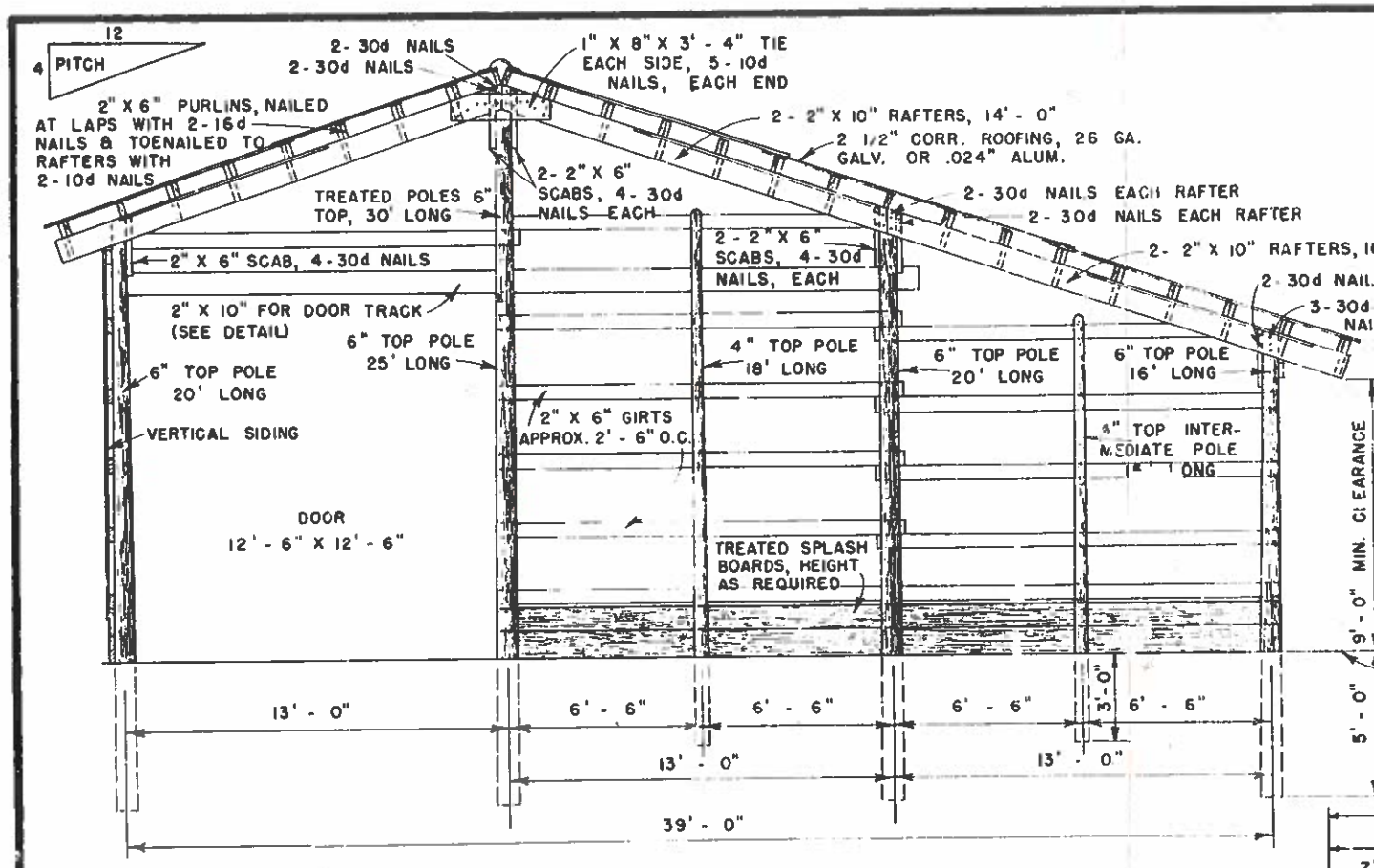

CROSS SECTION SHOWING END WALL FRAMING

SCALE: 1/4" = 1' - 0"

NOTE:

IF IN THE FUTURE THIS BARN IS TO BE WIDENED TO 52' AS SHOWN ON SHEET 3, USE LONGER POLES AS SHOWN ON SHEET 3.

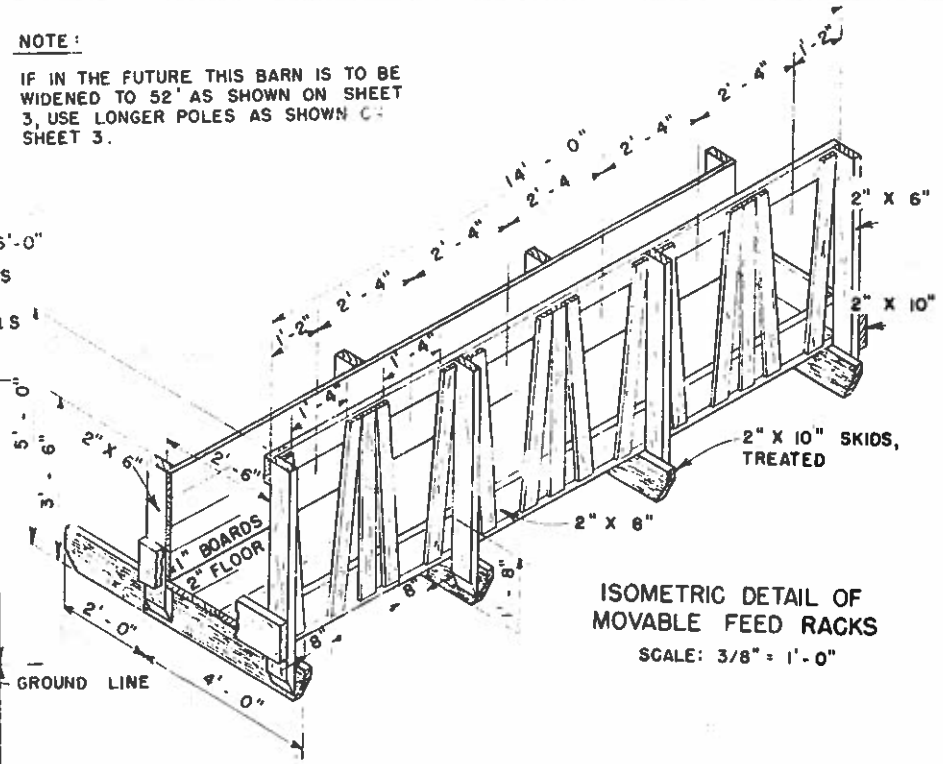

ISOMETRIC DETAIL OF MOVABLE FEED RACKS

SCALE: 3/8" = 1'-0"

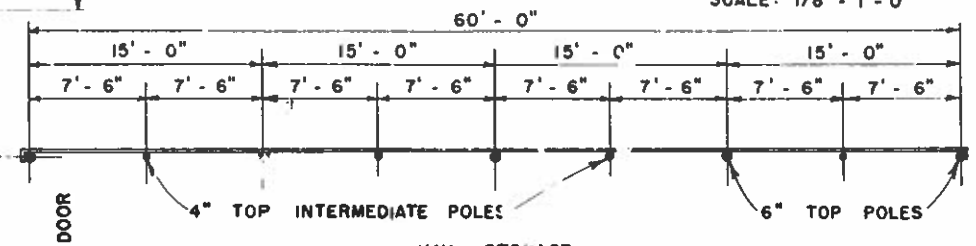

FLOOR PLAN

SCALE: 1/8" = 1'-0"

ROOF FRAMING PLAN

SCALE: 1/8" = 1'-0"

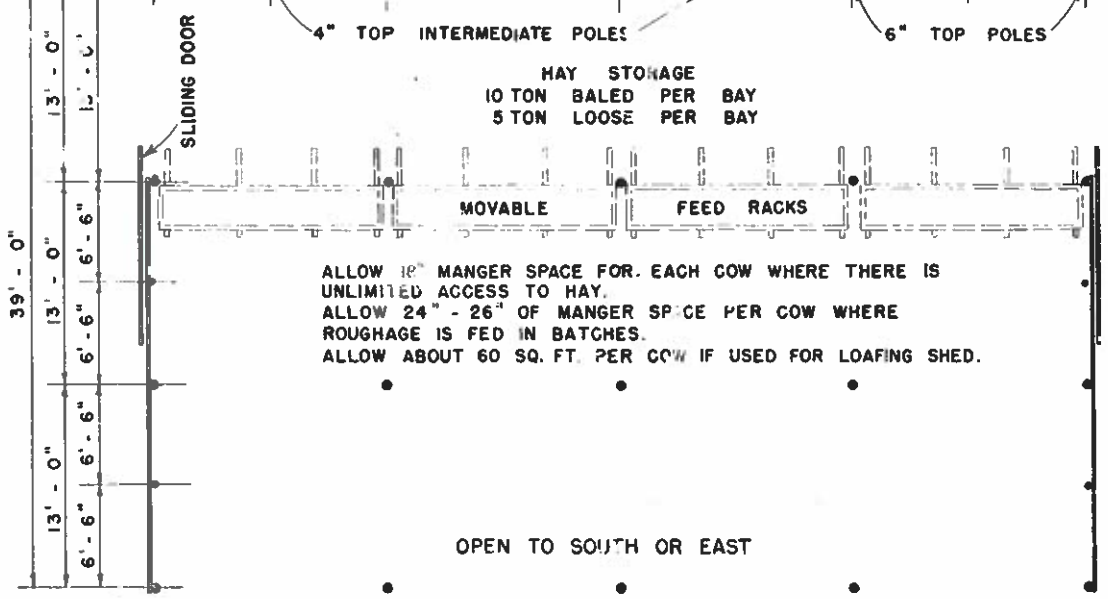

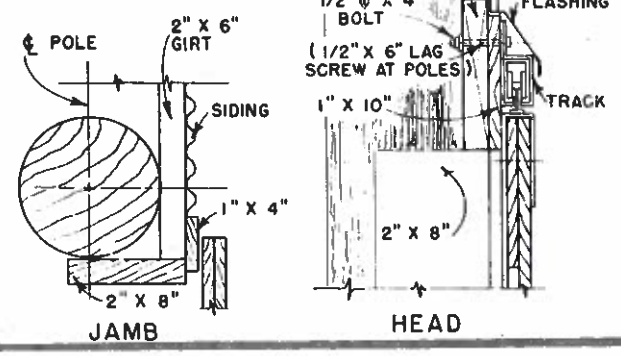

DOOR DETAIL

SCALE: 1 1/2" = 1'-0"

TEXAS AGRICULTURAL EXTENSION SERVICE THE TEXAS A&M UNIVERSITY SYSTEM AND U. S. DEPARTMENT OF AGRICULTURE COOPERATING DANIEL C. PFANNSTIEL, DIRECTOR, COLLEGE STATION, TEXAS	
POLE BARN – 39' WIDE	
DRAWN BY:	SCALE: AS SHOWN
TRACED BY:	SHEET 2 OF 3
AUG '76	SERIAL NO. 5780

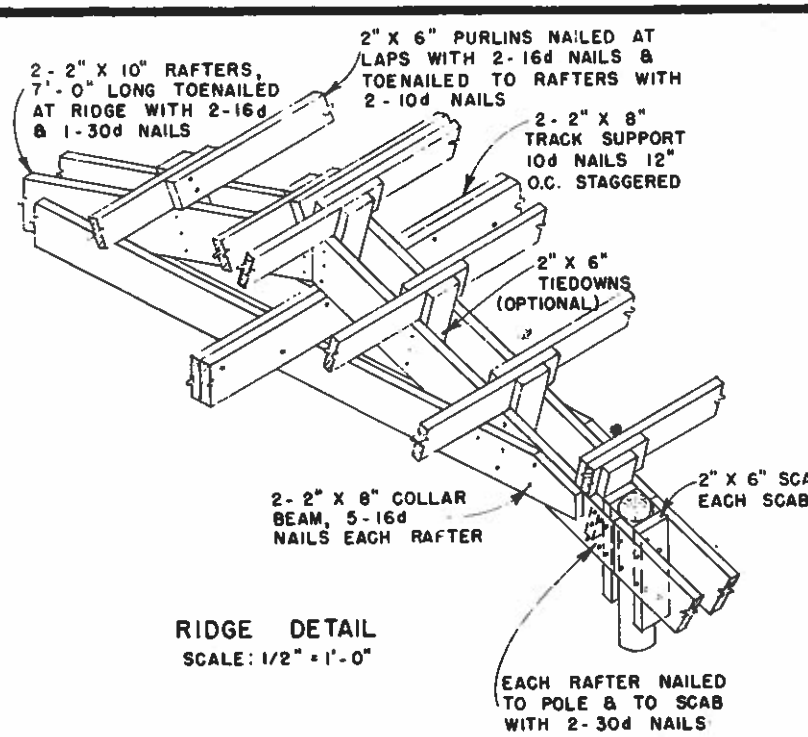

RIDGE DETAIL
SCALE: 1/2" = 1'-0"

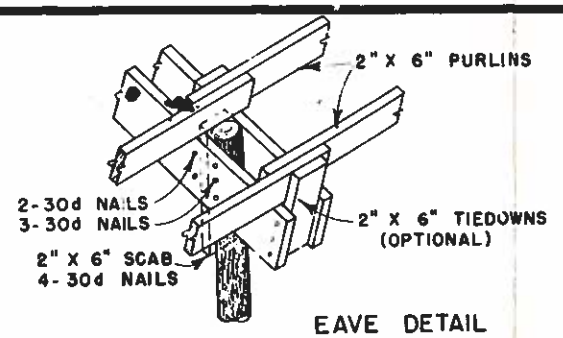

EAVE DETAIL
SCALE: 1/2" = 1'-0"

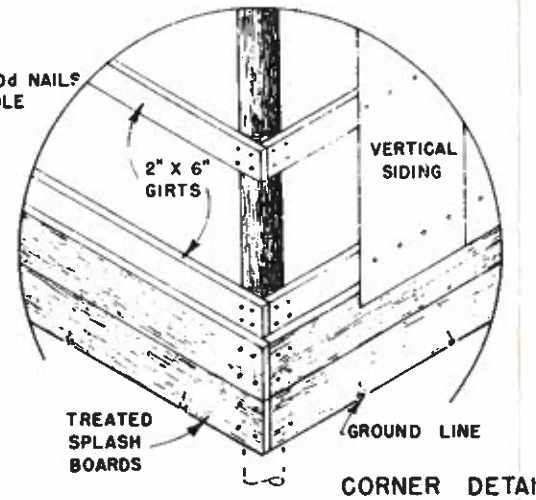

CORNER DETAIL
SCALE: 1/2" = 1'-0"

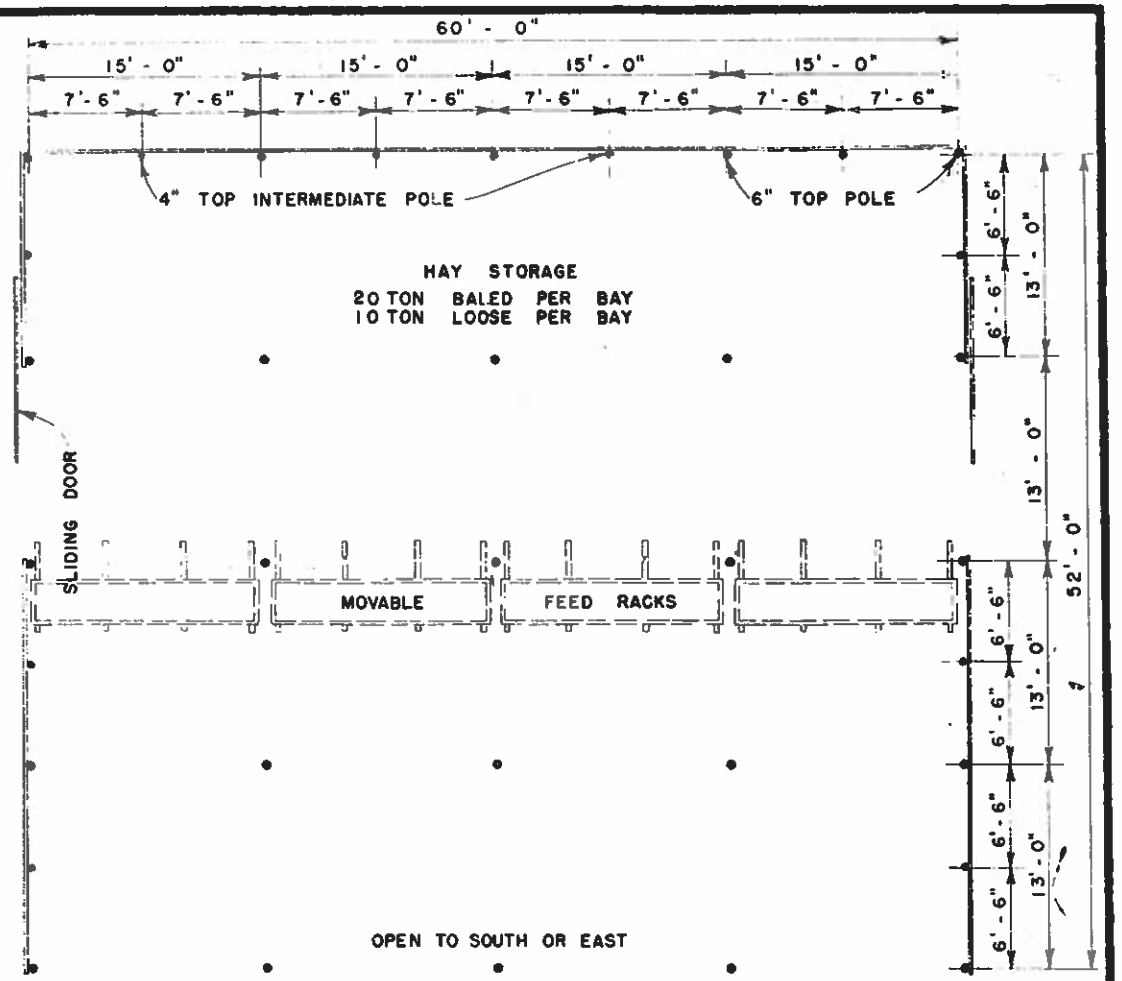

FLOOR PLAN
SCALE: 1/8" = 1' - 0"

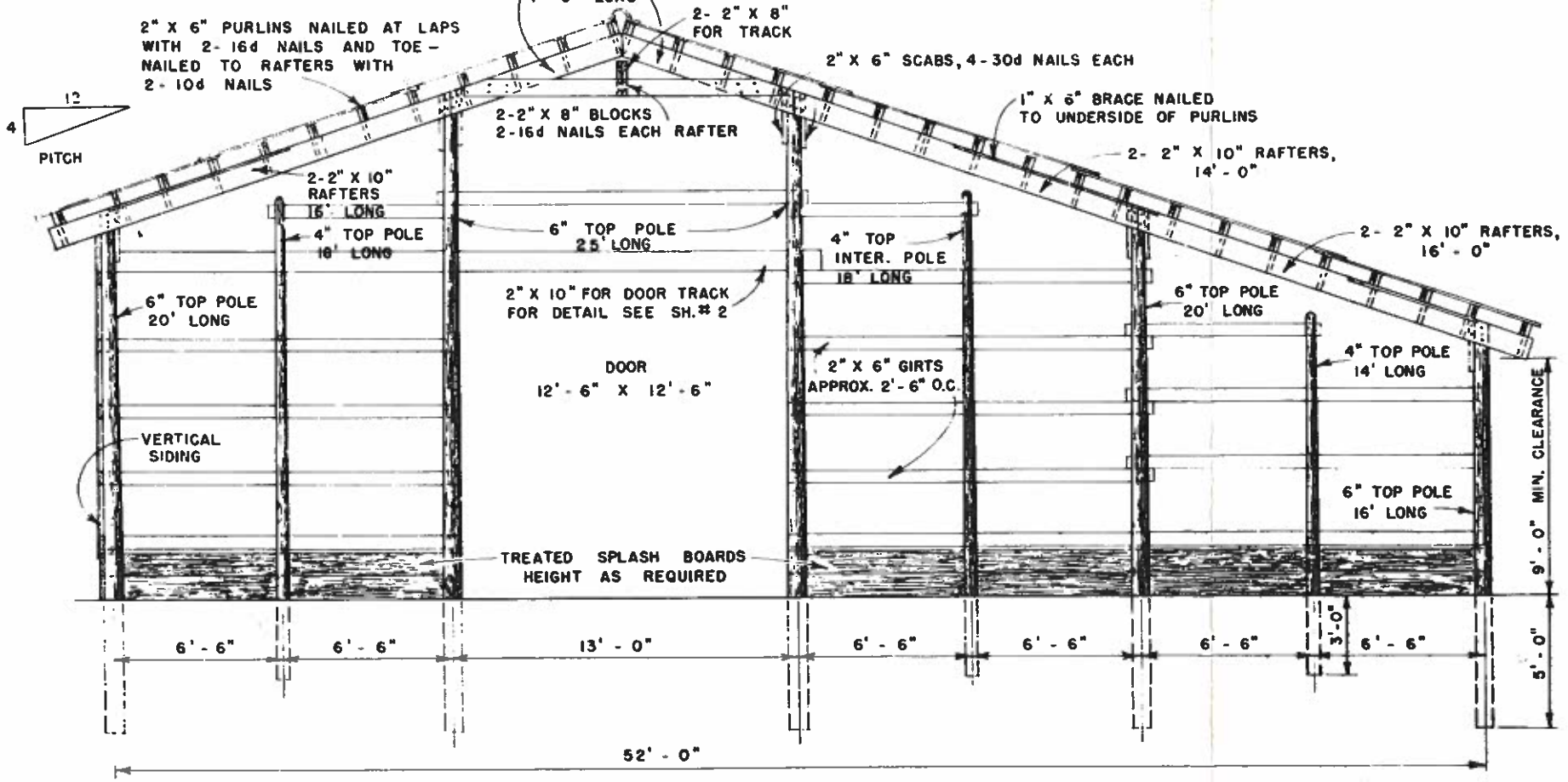

CROSS SECTION SHOWING END WALL FRAMING
SCALE: 1/4" = 1' - 0"

NOTE:

ROOFING; PURLIN SPACING NOT TO EXCEED 2' - 0" FOR .024", 2 1/2" CORRUGATED ALUM. OR 26 GA. 2 1/2" CORRUGATED GALVANIZED STEEL. SIDE LAP SHEETS AT LEAST 1 1/2" CORRUGATIONS. END LAPS 6" MIN.
USE 2 1/2" CORRUGATED RIDGE ROLL.
LUMBER NOMINAL, ALLOWABLE FIBER STRESS
1500 PSI FOR PURLINS,
1200 PSI FOR RAFTERS
IF METAL SIDING IS USED, NAILING GIRTS TO BE SPACED TO CONFORM TO MANUFACTURERS DIRECTIONS.

TEXAS AGRICULTURAL EXTENSION SERVICE
THE TEXAS A&M UNIVERSITY SYSTEM
AND
U. S. DEPARTMENT OF AGRICULTURE COOPERATING
DANIEL C. PFANNSTIEL, DIRECTOR, COLLEGE STATION, TEXAS

POLE BARN-39' WIDE

DRAWN BY:	SCALE: AS SHOWN
TRACED BY:	SHEET 3 OF 3
AUG '76	SERIAL NO. 5780