Feral Hog Trap Plans
Kerrville Rooter Gate
With Missouri Trigger

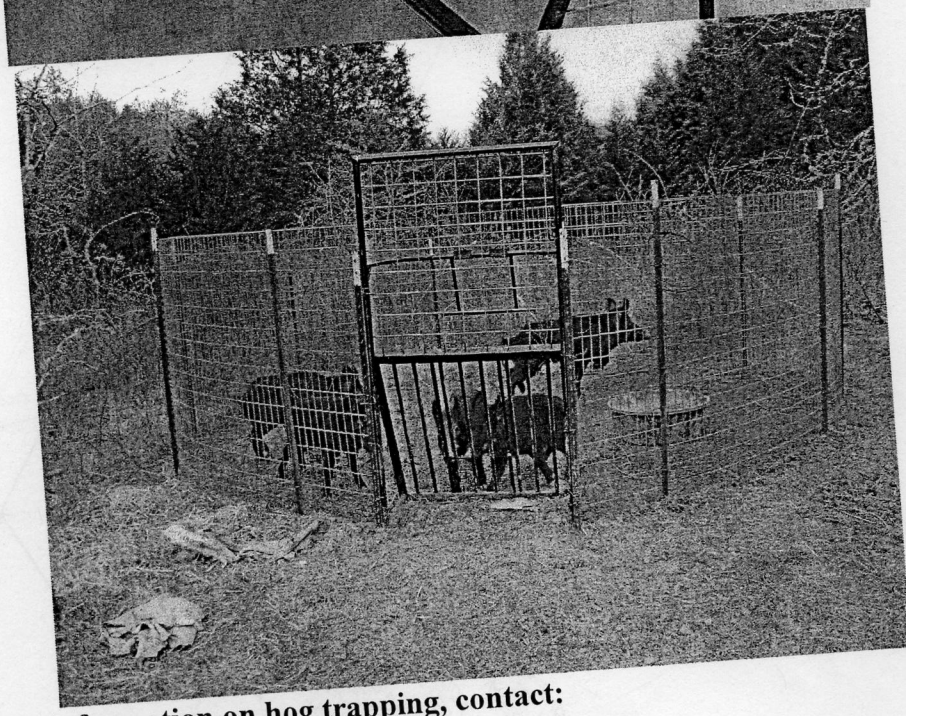

For more information on hog trapping, contact:
USDA Wildlife Services
1714 Commerce Ct. Suite C
Columbia, MO 65202
573-449-3033 x13
dan.w.mcmurtry@aphis.usda.gov

Kerrville Rooter Gate w/ Trigger
Sht. 1

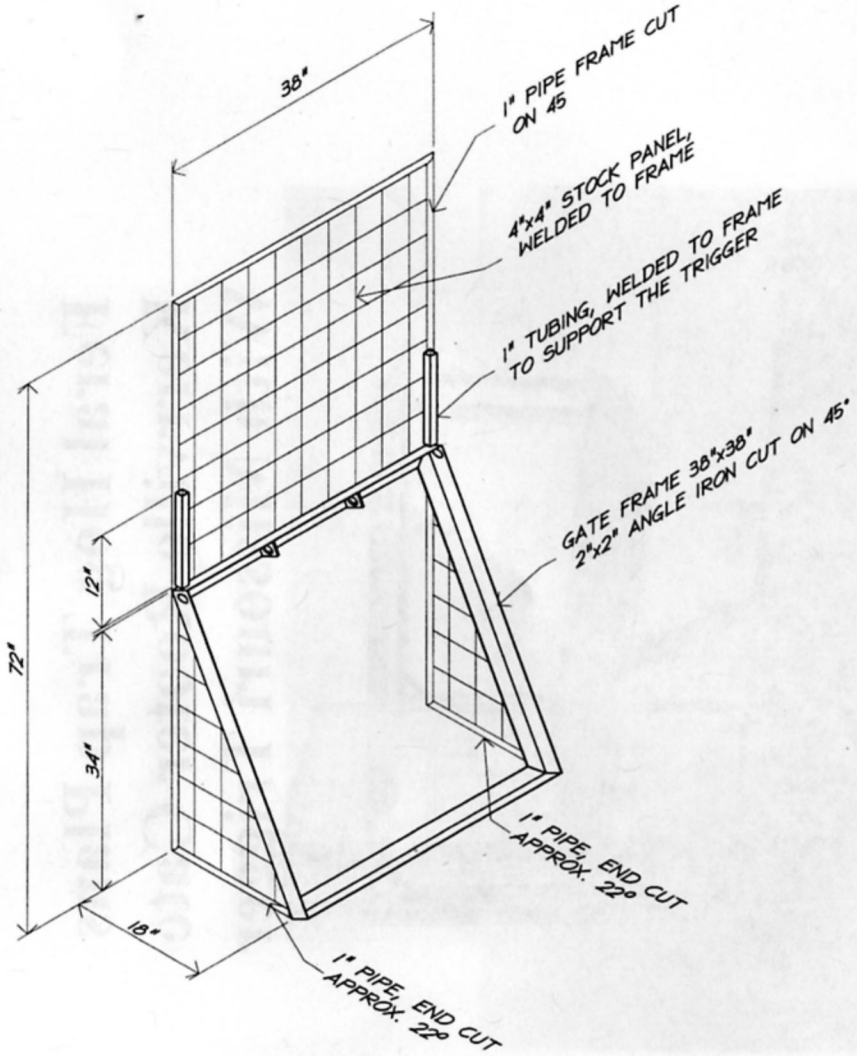

KERRVILLE HOG ROOTER GATE PANEL

SCALE: $^1/_2$"=1'–0"

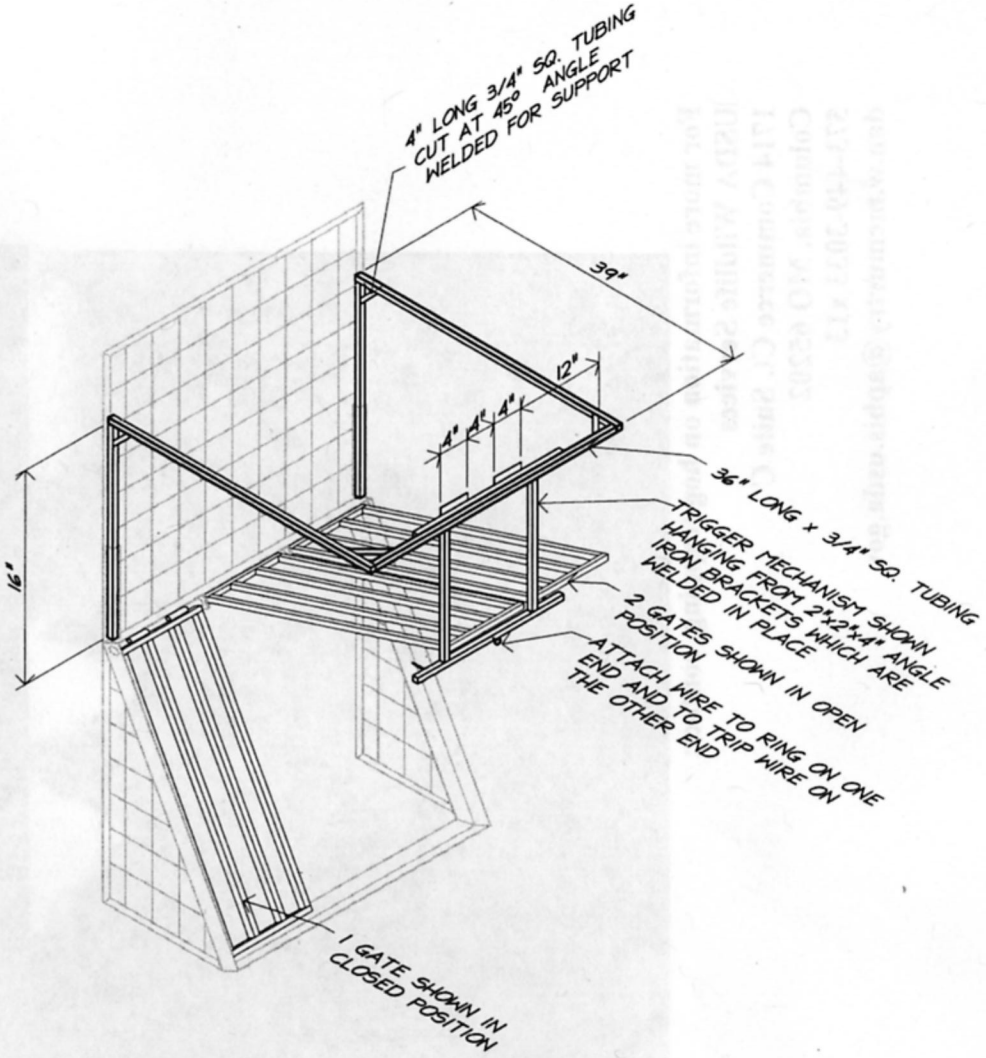

KERRVILLE HOG ROOTER GATE

SCALE: $^1/_2$"=1'–0"

United States Dept. of Agriculture • Wildlife Services • (573)449–3033 • 1714 Commerce Court, Suite C, Columbia, MO 65202 USDA
Designed by Bob Sims (TX USDA) • Drafted by Rhonda Bonnot (MDC) • Trigger Design by Dan McMurtry (MO. USDA) With cooperation from MDC Design & Development

Kerrville Hog Rooter Gate w/ Trigger
Sht 2

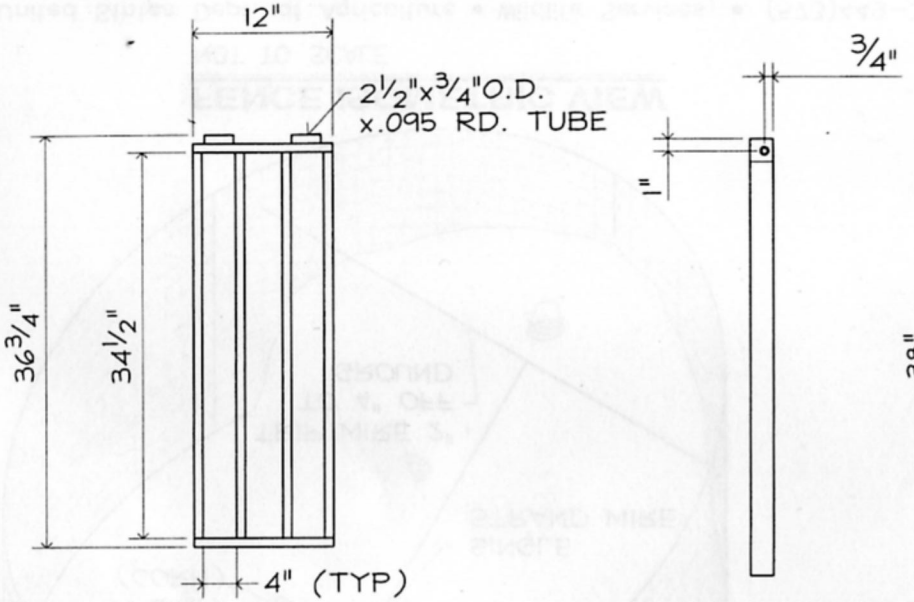

GATE DETAIL (TYPICAL OF 3)

SCALE: ¾"=1'-0"

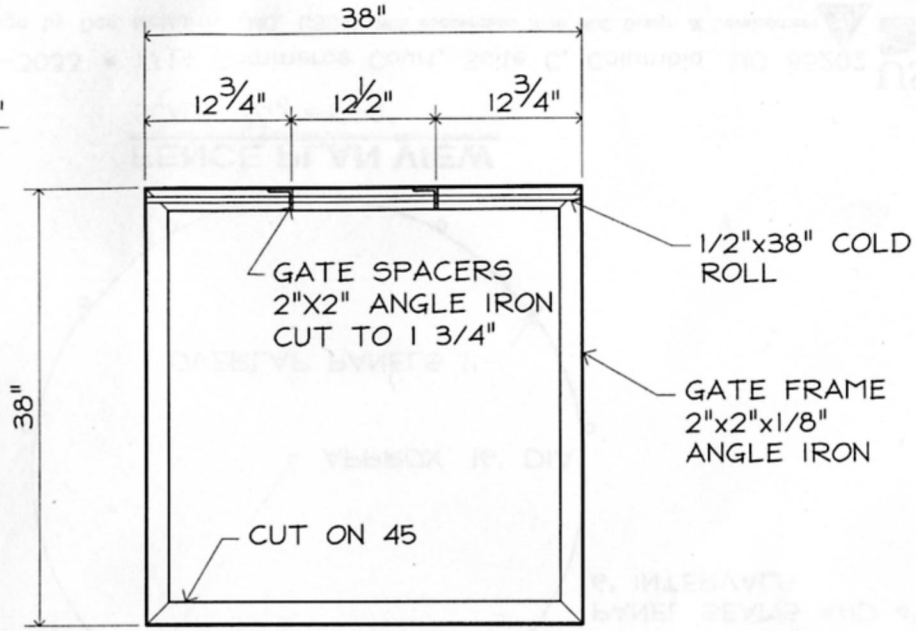

GATE FRAME DETAIL

SCALE: ¾"=1'-0"

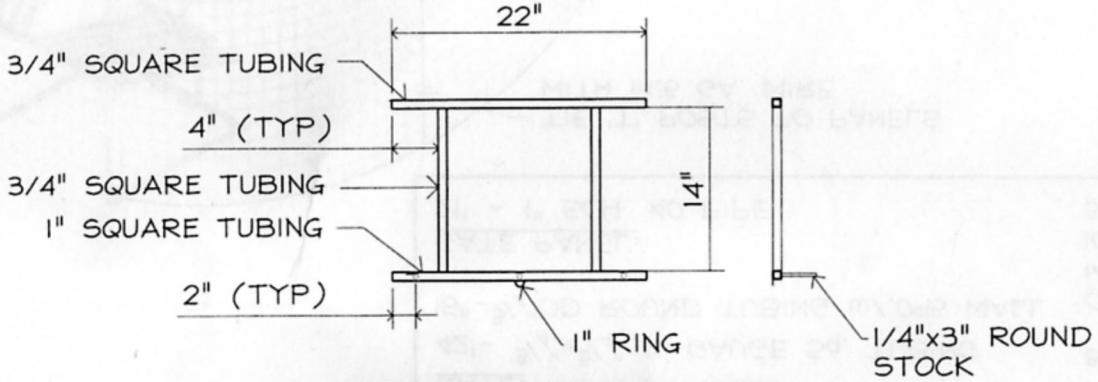

TRIGGER MECHANISM

SCALE: ¾"=1'-0"

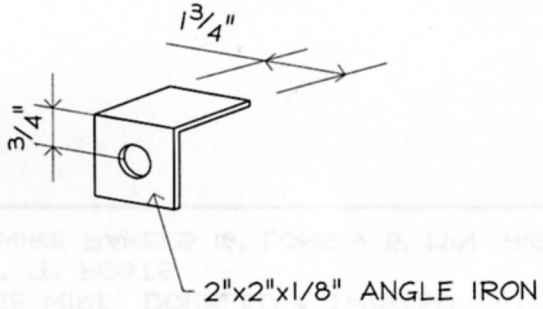

SPACER

SCALE: 3"=1'-0"

United States Dept. of Agriculture • Wildlife Services • (573)449-3033 • 1714 Commerce Court, Suite C, Columbia, MO 65202
Designed by Bob Sims (TX USDA) • Drafted by Rhonda Bonnot (MDC) • Trigger Design by Dan McMurtry (MO. USDA) With cooperation from MDC Design & Development

errville Hog Rooter Gate w/ Trigger
nt. 3

MATERIALS LIST:

GATE FRAME:
14' - 2"x2"x1/8" ANGLE IRON
38" - 1/2" COLD ROLL

GATE:
42'- 3/4"x3/4" 16 GAUGE Sq. TUBING
15"-3/4"OD ROUND TUBING w/.095 WALL

GATE PANEL:
21' - 1" SCH. 40 PIPE

TRIGGER MECHANISM:
20' - 3/4"x3/4" 16 GAUGE Sq. TUBING
33" - 1"x1" Sq. 14 GAUGE TUBING
9"- 1/4" ROUND STOCK
1 - 1" RING
8" 2x2 ANGLE IRON

OTHER SUPPLIES:
14.5 GAUGE WIRE, DOUBLED & TWISTED
10 - 6'-6" 'T' POSTS
3 - 4x4 WIRE PANELS 16' LONG x 5' MIN. HIGH

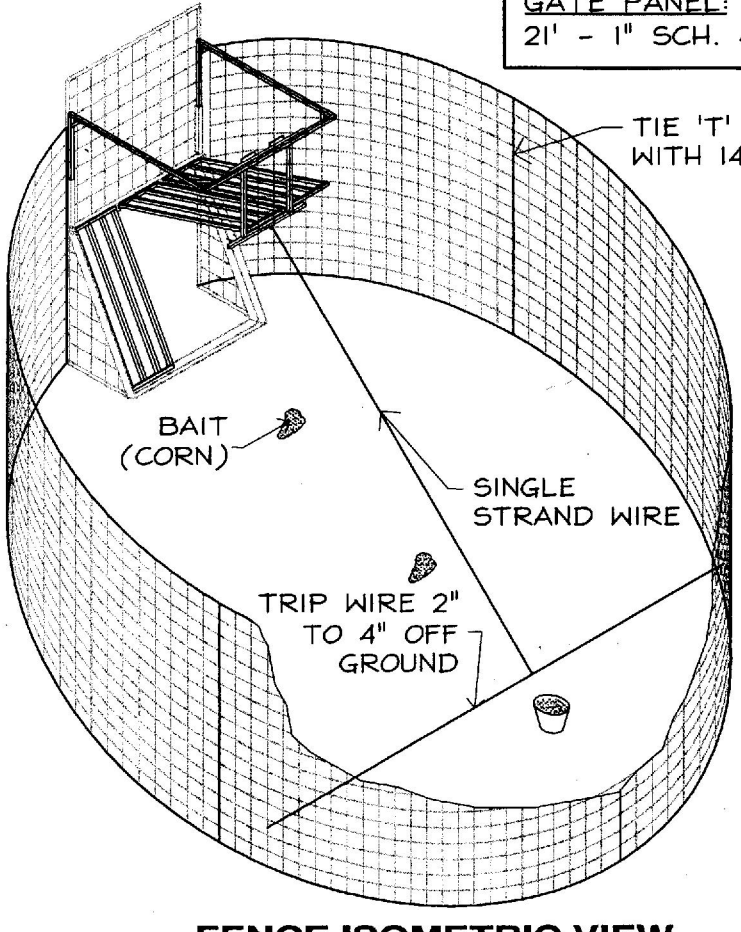

FENCE ISOMETRIC VIEW
NOT TO SCALE

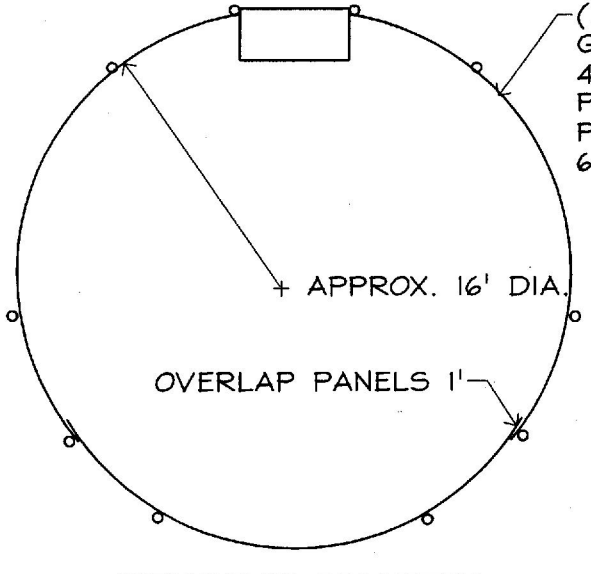

FENCE PLAN VIEW
SCALE: 3/16"=1'-0"

United States Dept. of Agriculture • Wildlife Services • (573)449-3033 • 1714 Commerce Court, Suite C, Columbia, MO 65202
Designed by Bob Sims (TX USDA) • Drafted by Rhonda Bonnot (MDC) • Trigger Design by Dan McMurtry (MO. USDA) With cooperation from MDC Design & Development